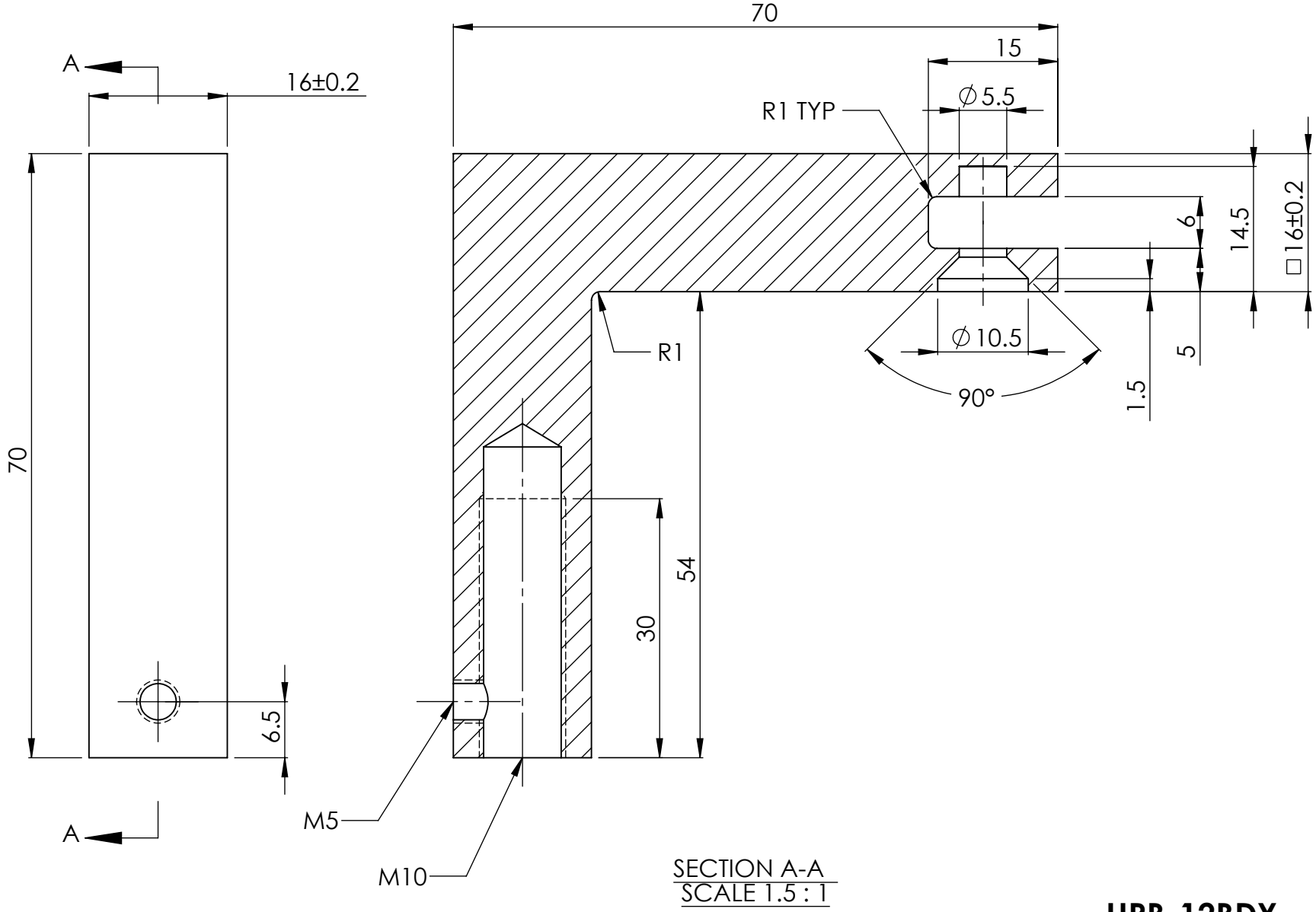


**HRB-12BDY**

linnea®

800.219.2366 www.linnea-home.com